360°/180° Camera Mount & Accessory Matrix

IndigoVision

	BX Range, 6MP/12MP Fisheye	BX Range, 8MP Panoramic Dome Camera
	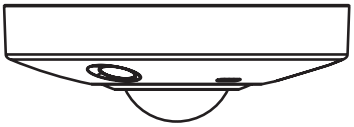	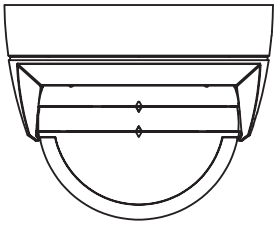
Mount/Accessory		
Wall Mount	130081	130181
Vertical Pole Mount	130082	130182
Corner Mount	130184 (Requires 130081 or 130071)	130184 (Requires 130181)
Pole Mount	130083 (Requires 130071 or 130081); 130183 (Requires 130071 or 130081)	130183 (Requires 130181)
1.5" NPT Adaptor (Male)	130087	130175
Junction Box	130071	130171 (Requires 130181)
Power Junction Box	130172 (Requires 130081)	130172 (Requires 130181)
Power Supply	110068; 130176	130176

IndigoVision 360°/180° Camera Mount & Accessory Matrix Appendix - Page 2

Mount Name	Camera Range	Dimensional Drawing	Product Codes
Wall Mount	BX Range Fisheye	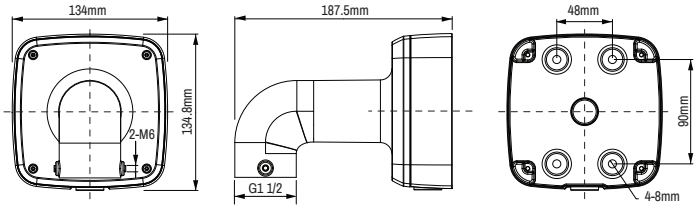 View on Front Face View on Side Face View on Back Face 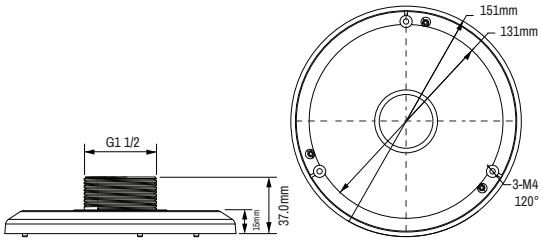 View on Side Face View on Bottom Face	130081
Wall Mount	BX Range Panoramic	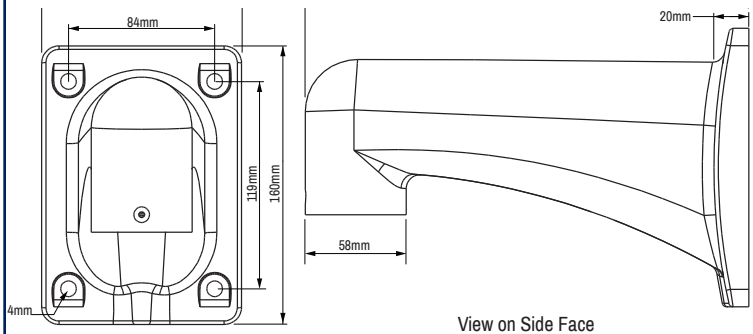 View on Front Face View on Side Face	130181
Vertical Pole Mount	BX Range Fisheye	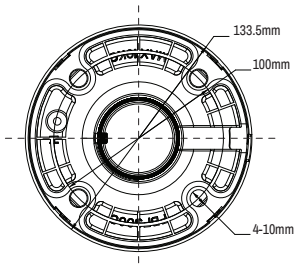 View on Top Face 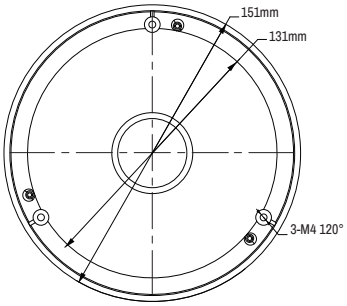 View on Bottom Face 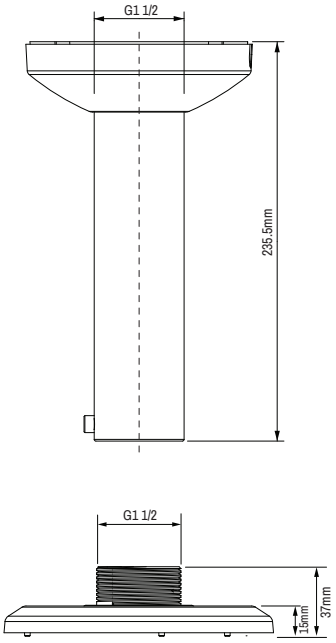 View on Side Face	130082

IndigoVision 360°/180° Camera Mount & Accessory Matrix Appendix - Page 3

Mount Name	Camera Range	Dimensional Drawing	Product Codes
Pendant Vertical Pole Mount	BX Range Panormaic	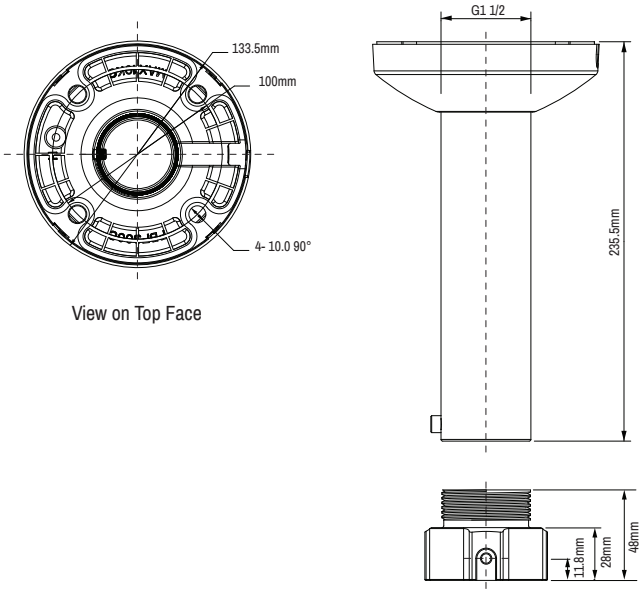	130182
Corner Mount Adaptor	BX Range Fisheye / Panormaic	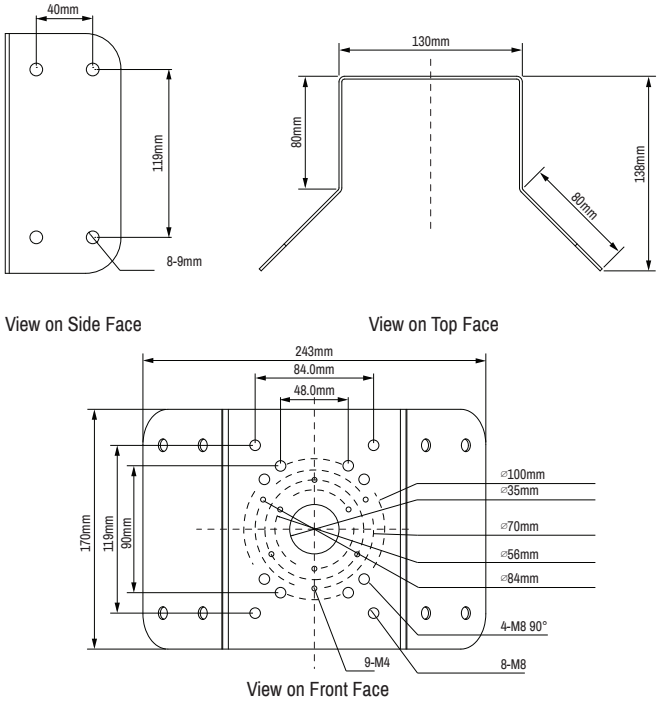	130184
Pole Mount Adaptor	BX Range Fisheye	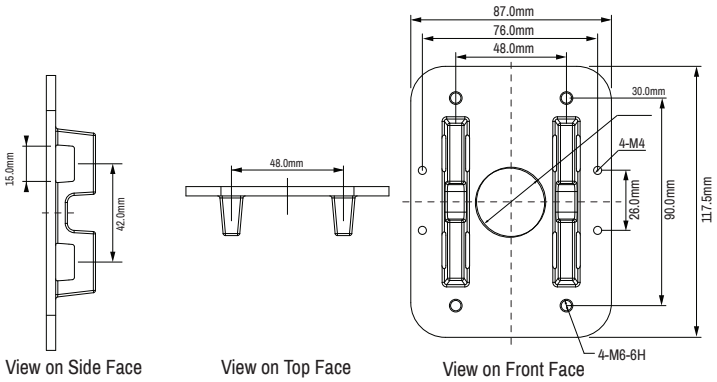	130083

IndigoVision 360°/180° Camera Mount & Accessory Matrix Appendix - Page 4

Mount Name	Camera Range	Dimensional Drawing	Product Codes
Pole Mount Adaptor	BX Range Panoramic	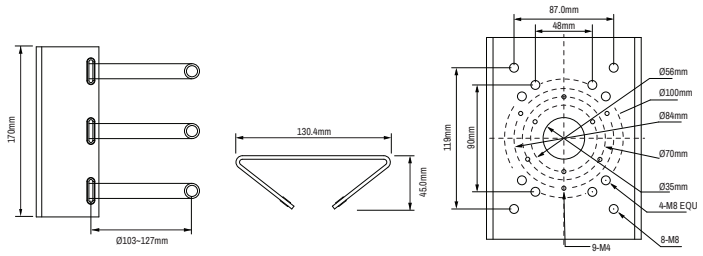 View on Side Face View on Top Face View on Front Face	130183
1.5" NPT Adaptor (Male)	BX Range Panoramic	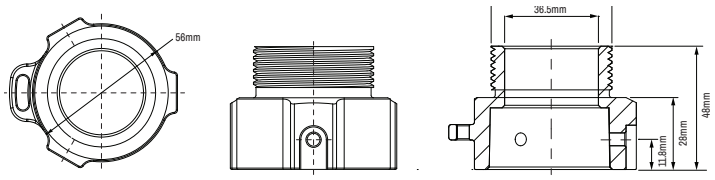 View on Top Face View on Side Face View on Side Face	130175
Junction Box	BX Range Fisheye	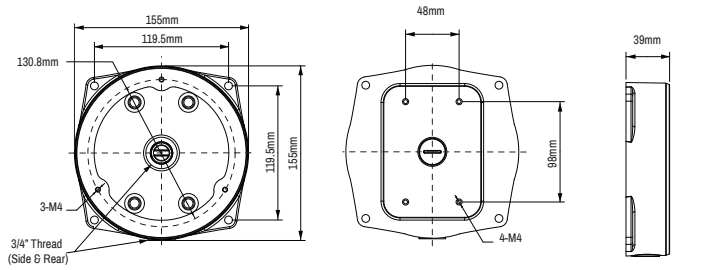 View on Top Face View on Bottom Face View on Side Face	130071
Junction Box	BX Range Panoramic	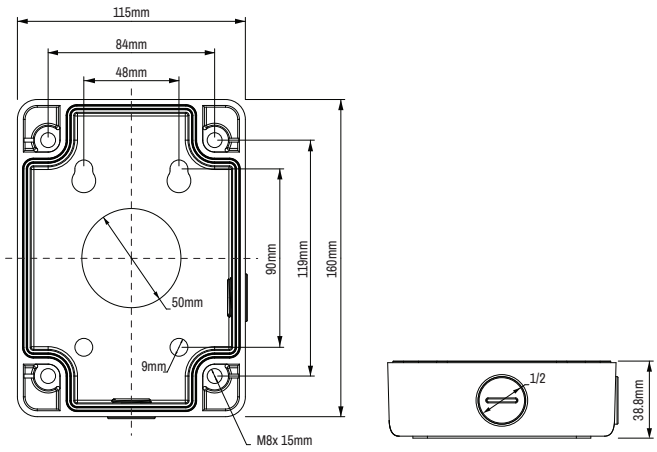 View on Bottom Face View on Side Face	130171

IndigoVision 360°/180° Camera Mount & Accessory Matrix Appendix - Page 5

Mount Name	Camera Range	Dimensional Drawing	Product Codes
Power Junction Box	BX Range Panoramic	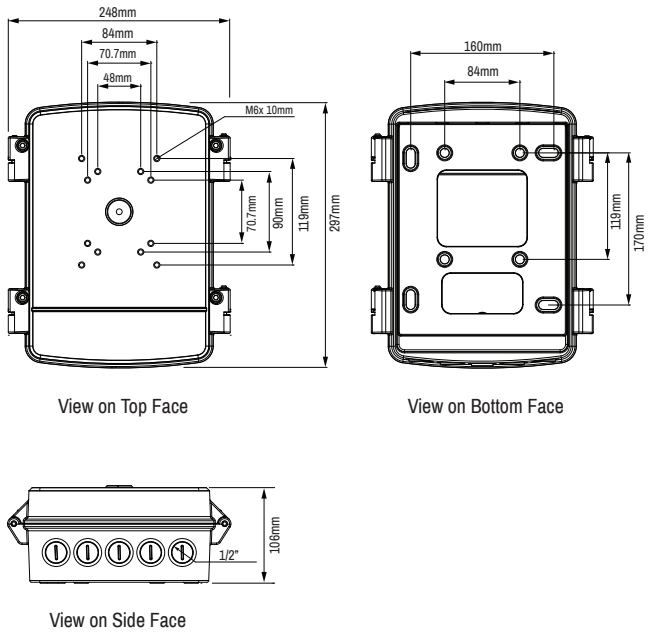 View on Top Face View on Bottom Face View on Side Face	130172

Power Supplies

Product Code	Input Voltage	Input Current (Max)	Input Connector	Output Voltage	Output Current (Max)	Output Connector	Operating Temperature Range	Dimensions (D x W x H)
110068	100-240VAC	0.8A	IEC320-C14	12V DC	2.5A	Bare Wires	-30°C to 60°C	115mm x 50mm x 35mm
130176	100-240VAC	2.0A	IEC320-C14	56V DC	0.67A	RJ45 Female Connector	-20°C to 40°C	166mm x 80mm x 44mm